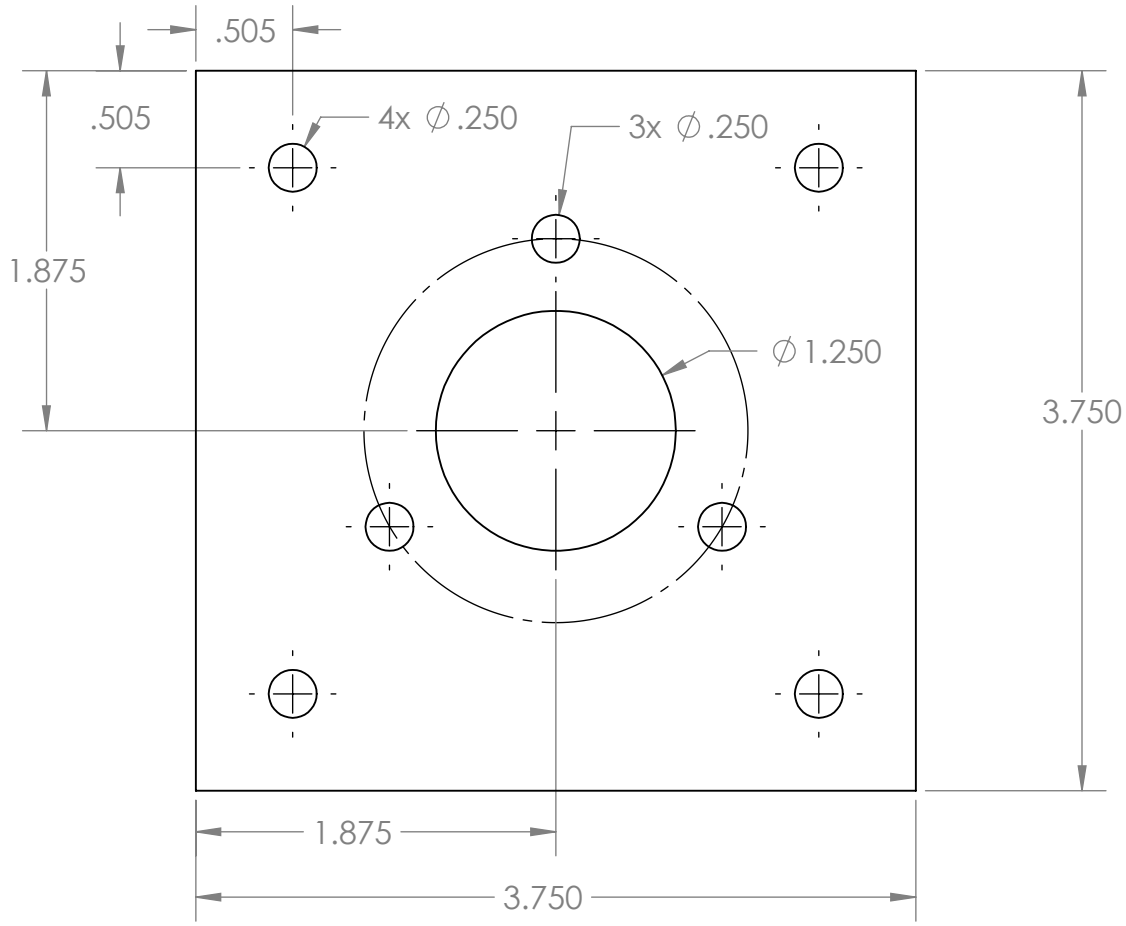

TITLE:		
Motor mount for ame 218		
SIZE A	DRAWN BY J. Wolley	REV A
SCALE: 1:1	24-SEP-2013	SHEET 1 OF 1

5 3 2 1